TUBE MOUNTING SET AETMXXX-60-115-3

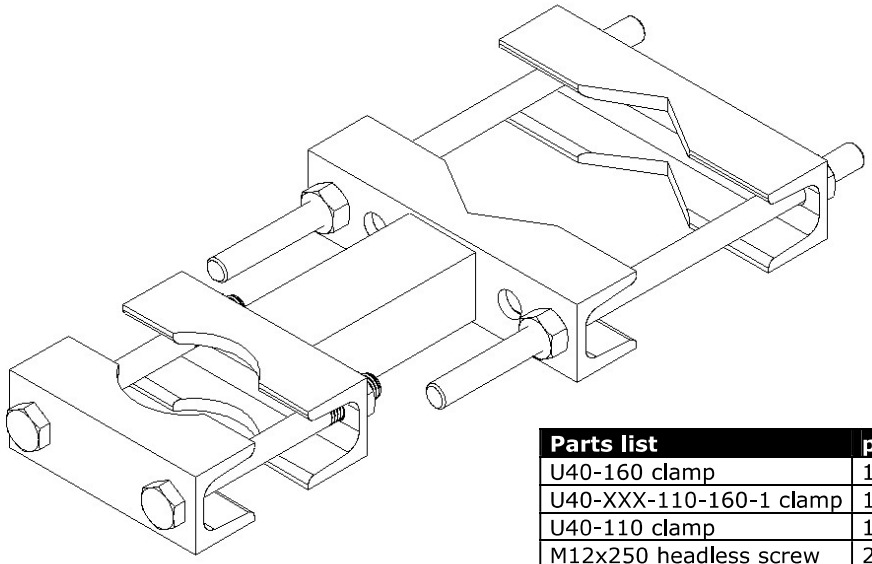

Parts list	pcs
U40-160 clamp	1
U40-XXX-110-160-1 clamp	1
U40-110 clamp	1
M12x250 headless screw	2
M12x120 screw	2
M12 nut	6

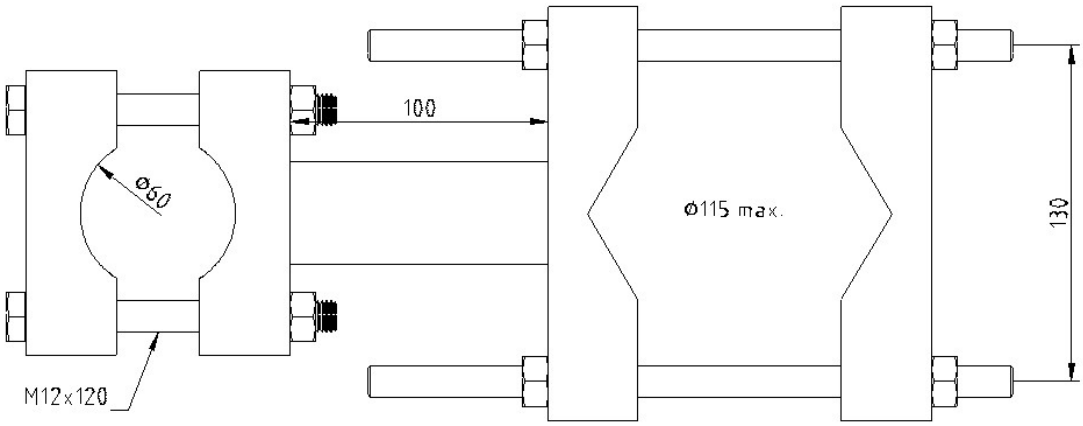

Type	AETMXXX-60-115-3
Dimensions (H x W x D) (∅ x H)	See above drawing XXX=bracket length (100 in picture)
Weight	3.1 kg (100mm bracket)
Mounting diameter	max ∅150 mm pipe ∅60 mm mounting pipe
Materials	Hot dip galvanized steel
Versions	-Bracket length (100,300,500mm in stock)
Options	-

Aerial Oy
Box 22
04401 Järvenpää
Finland
Tel. +358 9 2790 120
Fax +358 9 2910 210
http://www.aerial.fi
aerial@aerial.fi